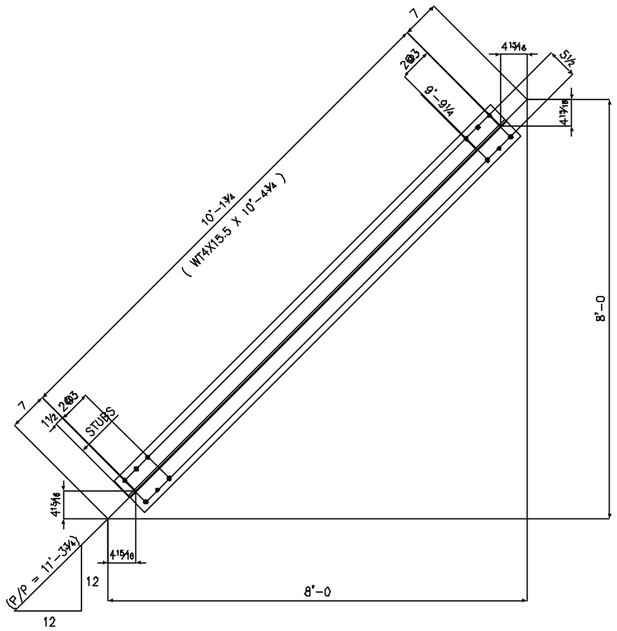

1 – BRACE – 1KB1

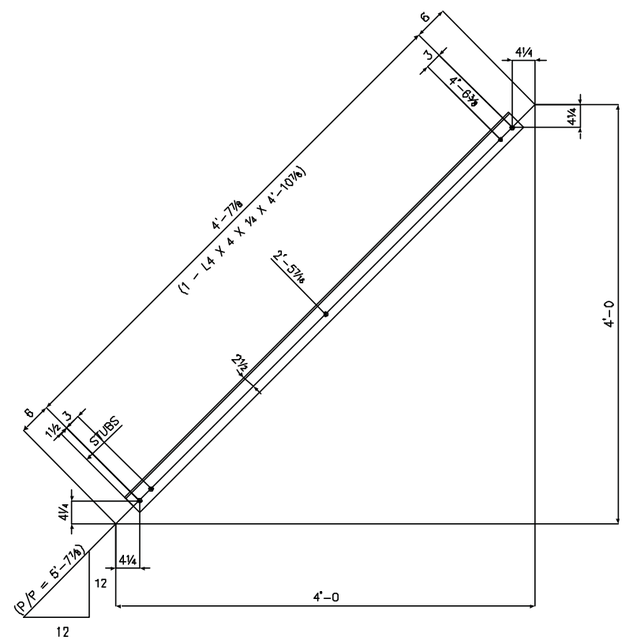

1 – BRACE – 1XB1

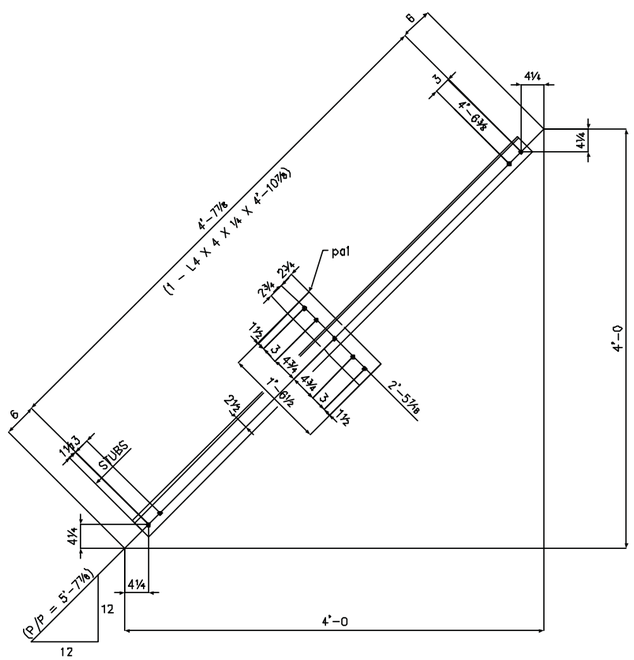

1 – BRACE – 1XB2

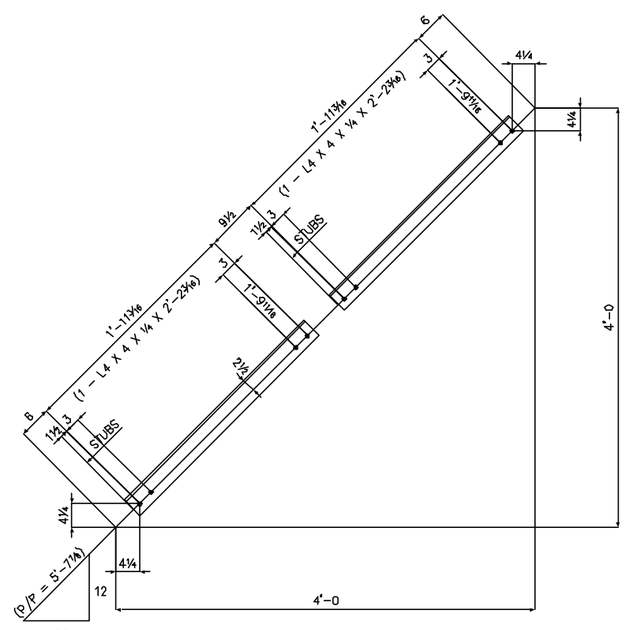

1 – BRACE – 1XB3

BILL OF MATERIAL

SHIPPING BILL		SHOP BILL						
NO. Pcs.	ERECTION MARK	NO.	SHAPE	LENGTH FT.	LENGTH IN.	ASSY. MARK	REMARKS	WEIGHT
1	1KB1	1	WT4X15.5	10	4¾			
1	1XB1	1	L4X4X¼	4	10⅞			
1	1XB2	1	L4X4X¼	4	10⅞			
		1	PL⅜X5½	1	6½	pa1		
1	1XB3	2	L4X4X¼	2	2 3/16			

REFERENCE DRWG. / LOCATION: E1				FIELD				
				SHOP				
				APPROVAL				
MATERIAL (UNLESS NOTED): A ~ 36	REV.	DATE	DESCRIPTION	PRINTS	NO.	DATE	NO.	DATE
SURFACE PREPARATION: S P 3								
SHOP PAINT: 1 S/C RED OXIDE	JOB: YOUR JOB NAME							
	LOCATION: YOUR JOB LOCATION							
SHOP CONNECTIONS/ELECTRODES: WELD / E70xx	CUSTOMER: YOUR CUSTOMER NAME							
	DRWG. COVERS: DETAILS							
FIELD CONNECTIONS: ¾"ø A325	HOLES (U.N.): 13/16"Ø	DETAILER: YOUR NAME DATE		JOB NO.: YOUR #		DRWG. NO.: F1		
		CHECKER: DATE						
		IN CHARGE OF: P.M. NAME						

SCALE : 1 = 1'-0